GIDDY Mirror

Small | Plaster | H. 48 x L. 82 x l. 5 cm | H. 19 x W. 32.3 x D. 2.3 in
Medium | Plaster | H. 90 x L. 82 x l. 6 cm | H. 35.5 x W. 32.3 x D. 2.5 in
Large | Plaster | H. 93 x L. 134 x l. 6 cm | H. 36.5 x W. 53 x D. 2.5 in
Extra Large | Plaster | H. 105 x L. 165 x l. 6 cm | H. 41.3 x W. 65 x D. 2.5 in

PIERRE YOVANOVITCH

MOBILIER

GIDDY Mirror

P Y

MOBILIER

GIDDY Mirror

P Y

MOBILIER

PLASTER

1. Dover White

1

Small

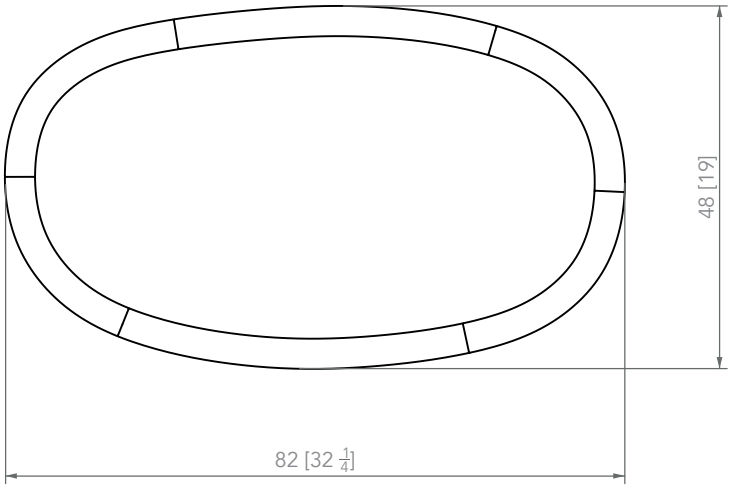

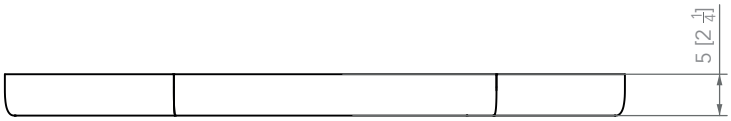

Medium

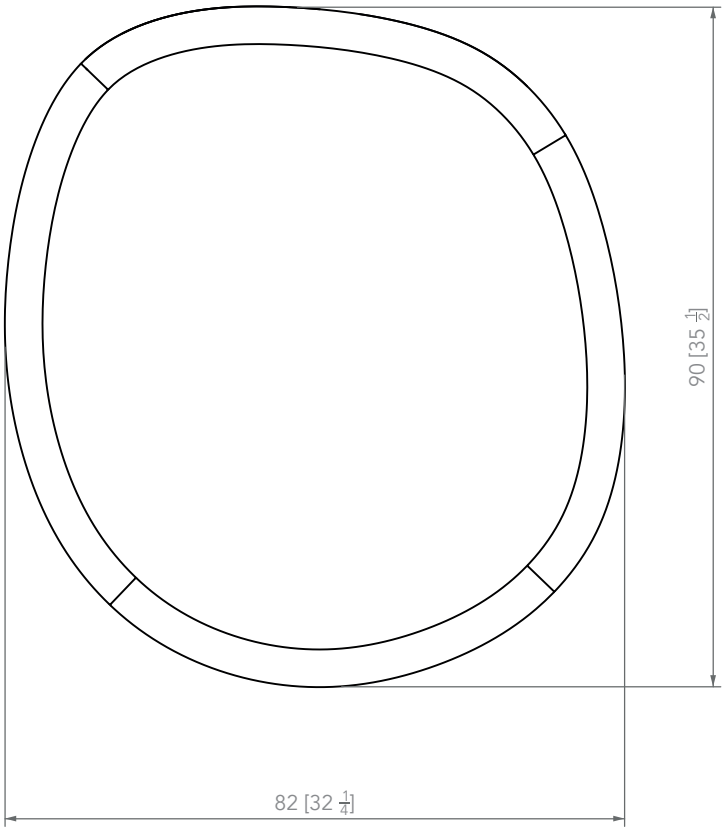

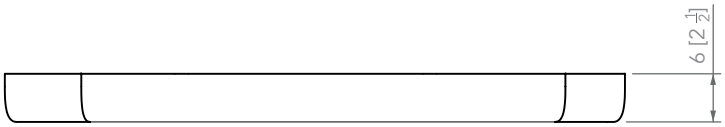

Large

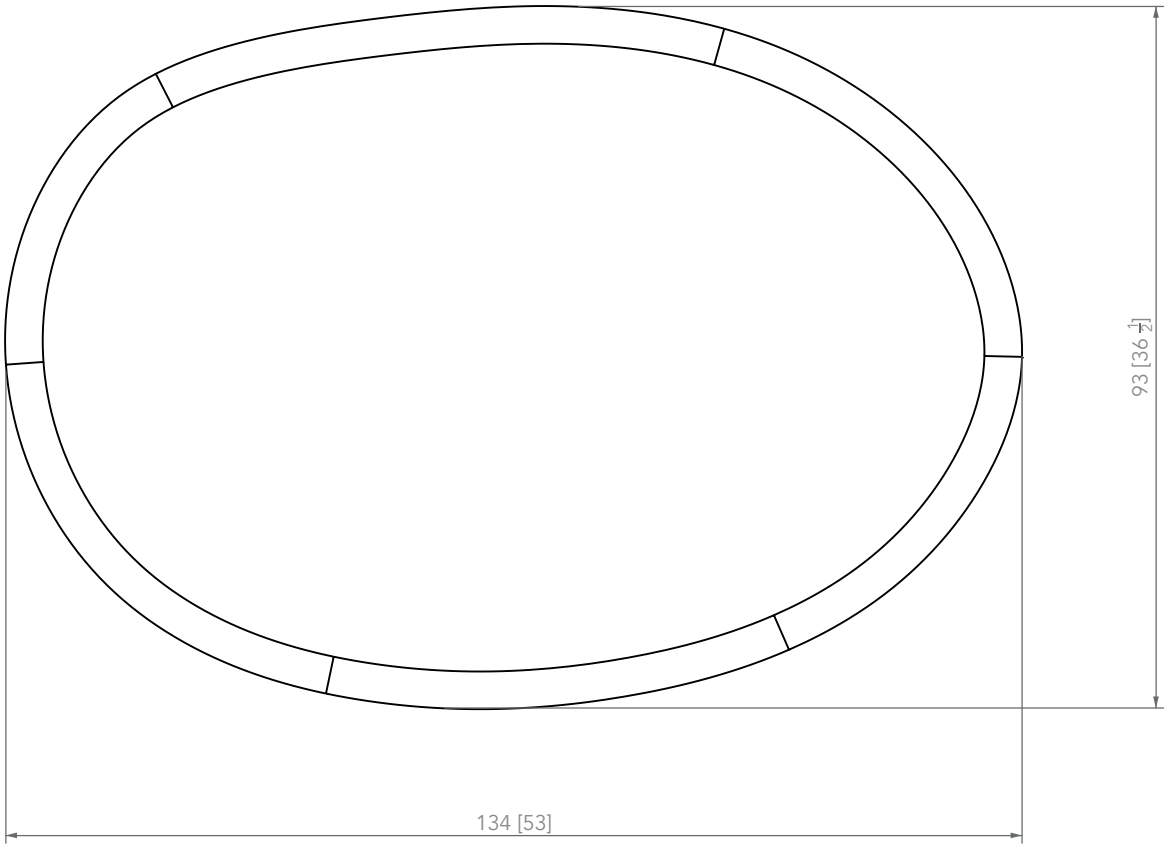

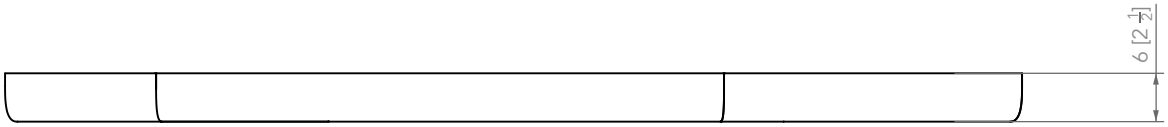

Extra Large

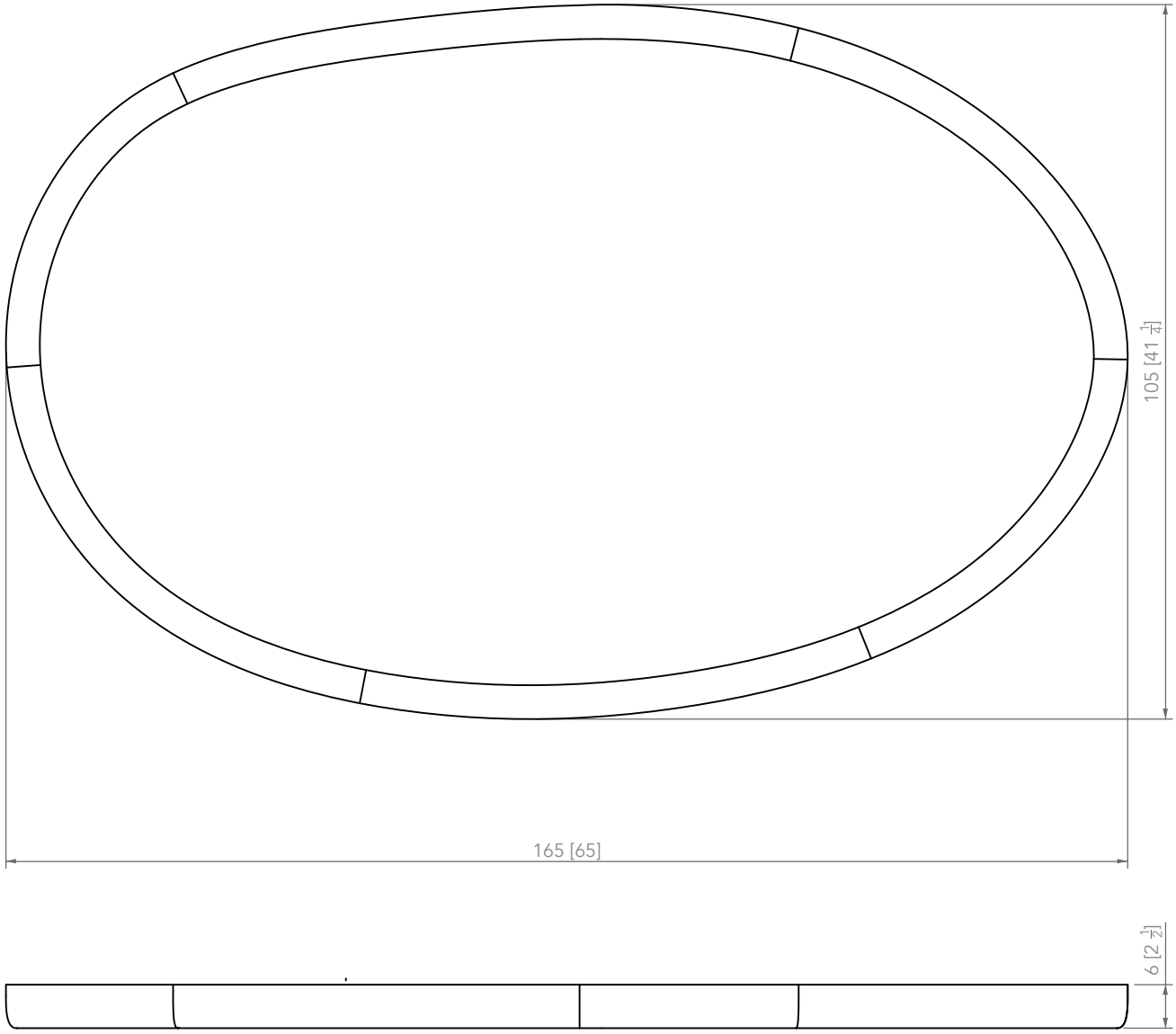

PIERRE YOVANOVITCH

MOBILIER

6 RUE BEAUREGARD, 75002, PARIS | +33 (0)1 42 66 33 98 | PIERREYOVANOVITCH.COM
For any information or enquiry regarding a product, please contact us at: enquiries@pierreyovanovitch.com