ASYMMETRY Curved Sofa

2 people | Fabric | H. 83 × L. 240 × l. 130 cm | H. 32.8 × W. 94.5 × D. 51.3 in
3 people | Fabric | H. 84 × L. 300 × l. 148 cm | H. 33 × W. 118 × D. 58.3 in

PIERRE YOVANOVITCH

MOBILIER

ASYMMETRY Curved Sofa

P Y

MOBILIER

ASYMMETRY Curved Sofa

P Y

MOBILIER

ASYMMETRY Curved Sofa

P Y

MOBILIER

ASYMMETRY Curved Sofa

P Y

MOBILIER

ASYMMETRY Curved Sofa

P Y

MOBILIER

P Y

MOBILIER

FABRIC

1. Chalk White
2. Midnight Blue
3. Canyon Red
4. Deia Beige
5. Carbon Black
6. Copper Red

1

2

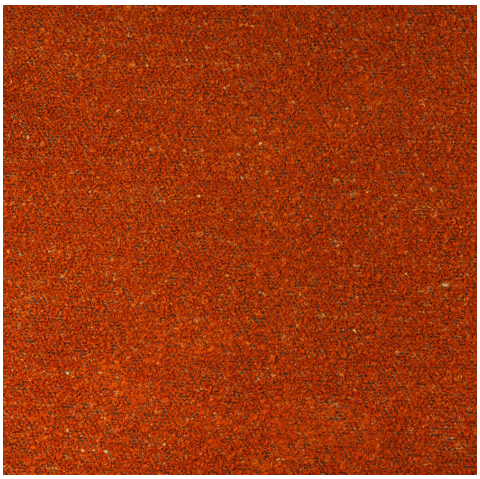
3

4

5

6

2 people

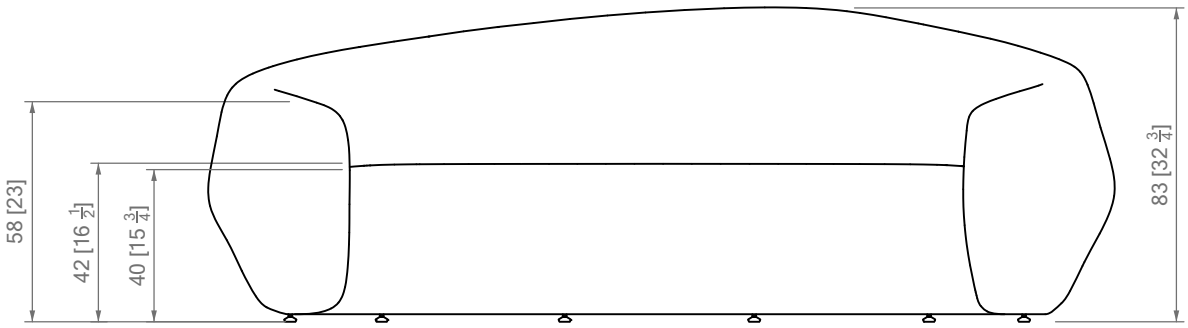

42 [16 $\frac{1}{2}$] top of the curved shape

40 [15 $\frac{3}{4}$] seat height

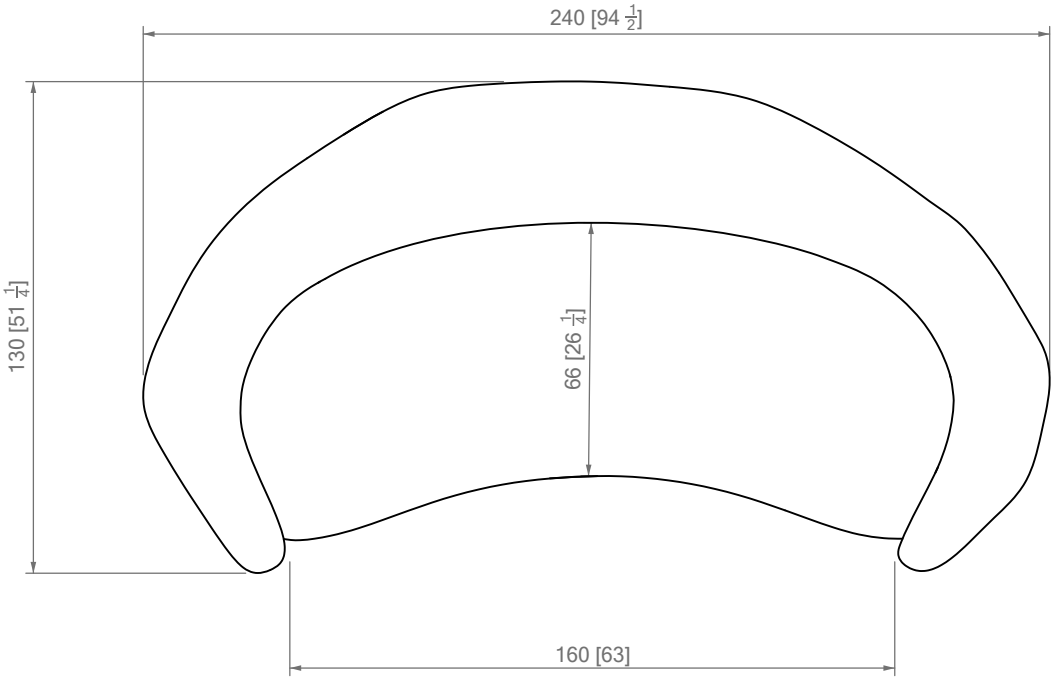

3 people

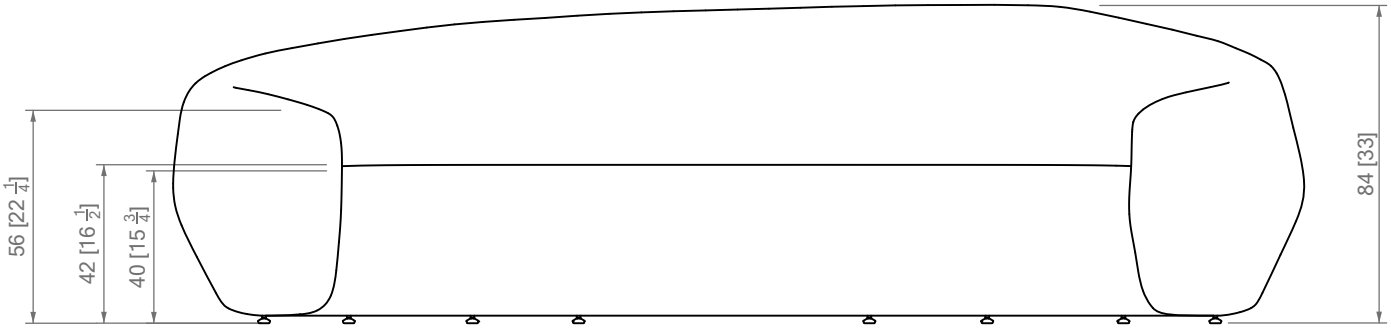

42 [16 $\frac{1}{2}$] top of the curved shape

40 [15 $\frac{3}{4}$] seat height

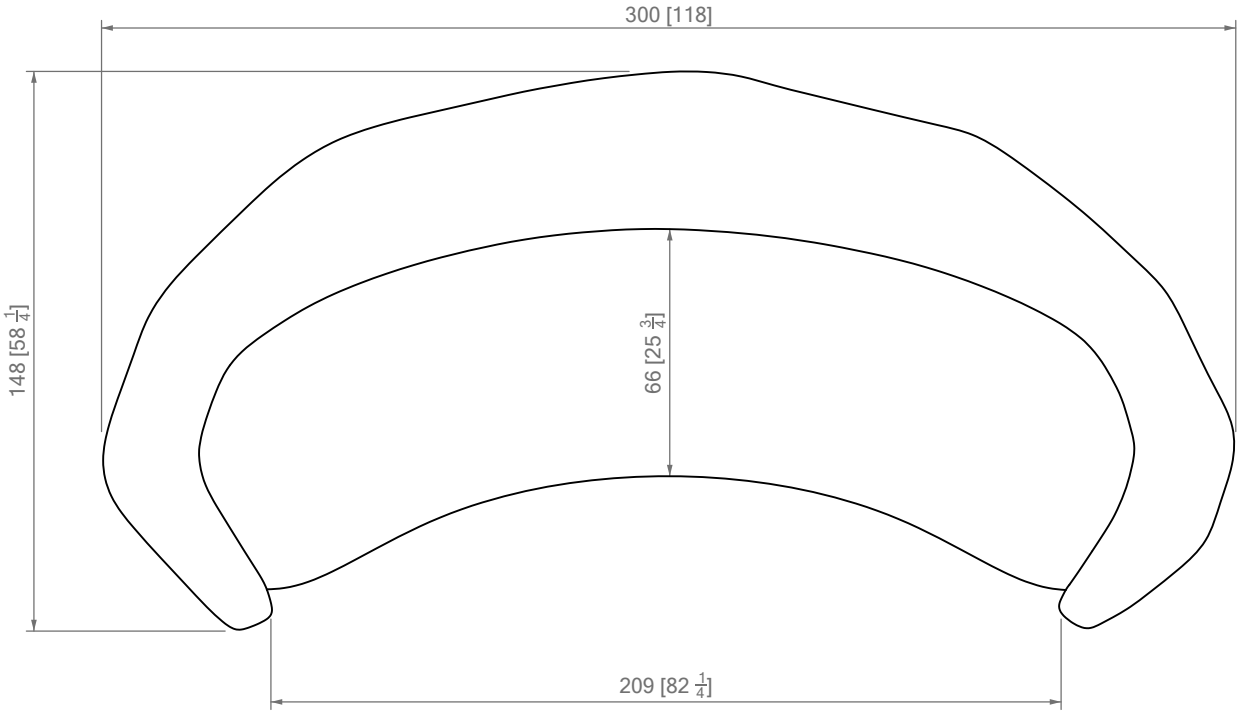

PIERRE YOVANOVITCH

MOBILIER

6 RUE BEAUREGARD, 75002, PARIS | +33 (0)1 42 66 33 98 | PIERREYOVANOVITCH.COM
For any information or enquiry regarding a product, please contact us at: enquiries@pierreyovanovitch.com