PAPILLON Chair

Solid oak & fabric | H. 90 x L. 54 x l. 52 cm | H. 35.5 x W. 21 x D. 20.8 in

PIERRE YOVANOVITCH

MOBILIER

PAPILLON Chair

P Y

MOBILIER

PAPILLON Chair

P Y

MOBILIER

P Y

MOBILIER

P Y

MOBILIER

FABRIC

1. Lichen Green
2. Macadamia White
3. Caramel Brown
4. Camo Green
5. Bosphore Blue
6. Chestnut Brown
7. Coffee Brown

1

2

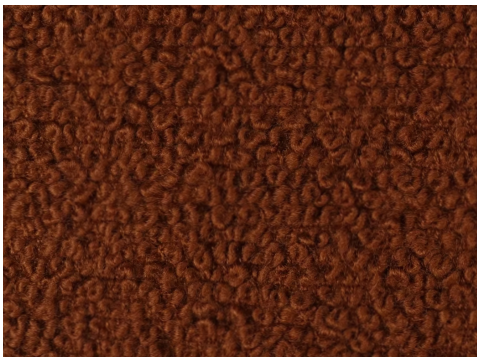
3

4

5

6

7

WOOD ESSENCES

1. Oiled Solid Oak

Solid wood is a natural product that responds to changes in temperature and humidity by expanding and contracting. Variation in graining, color and texture are inherent and to be expected.

1

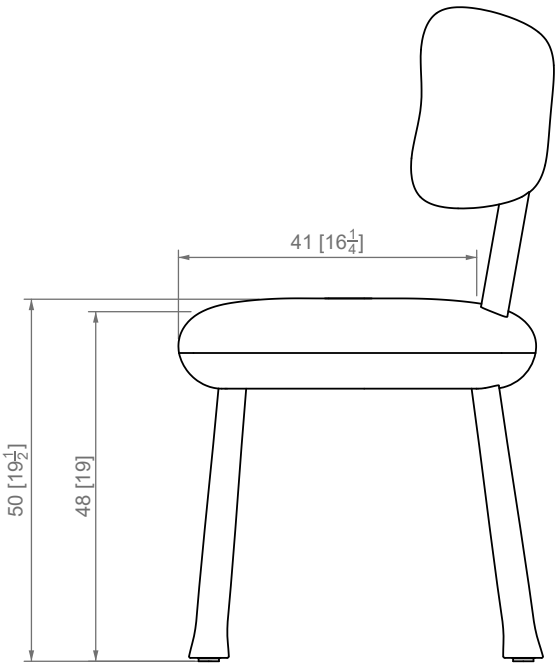

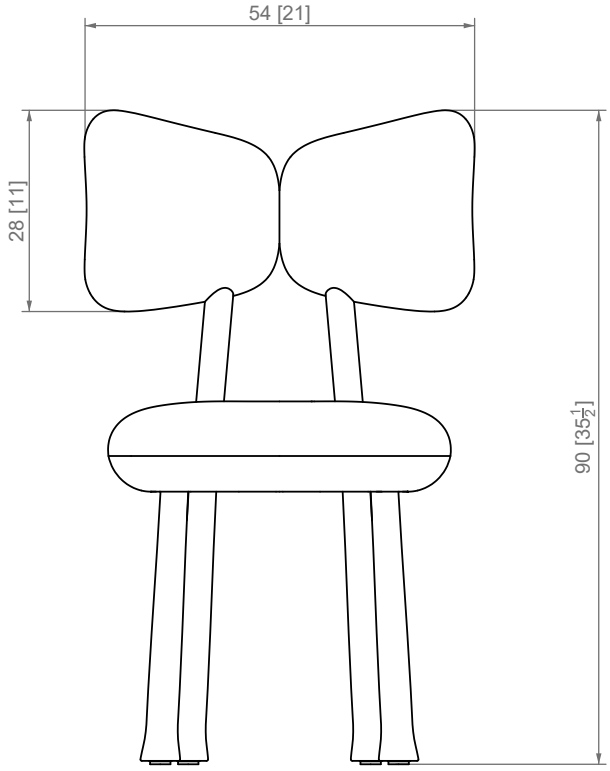

50 [19 $\frac{3}{4}$] top of the curved shape
48 [18 $\frac{3}{4}$] seat height

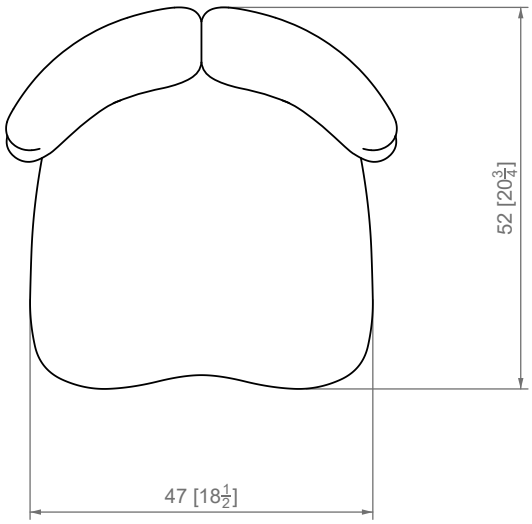

PIERRE YOVANOVITCH

MOBILIER

6 RUE BEAUREGARD, 75002, PARIS | +33 (0)1 42 66 33 98 | PIERREYOVANOVITCH.COM
For any information or enquiry regarding a product, please contact us at: enquiries@pierreyovanovitch.com